YOUR ADVENTURE UNFOLDS

K2 Expedition Double

with built-in coamings and pivot pedals

Feathercraft

FOLDING KAYAKS™

Feathercraft Products Ltd. 4-1244 Cartwright Street on Granville Island, Vancouver, British Columbia, Canada V6H 3R8
Telephone: (604) 681-8437 Toll Free: 1-888-681-8437 Fax: (604) 681-7282 www.Feathercraft.com info@feathercraft.com

Contents

The K2 Expedition Folding Kayak ..... Page 2
Specifications ..... Page 3
K2 Frame ..... Page 4
Care and Maintenance ..... Page 5
Disassembly ..... Page 6
K2 Assembly Instructions ..... Page 7

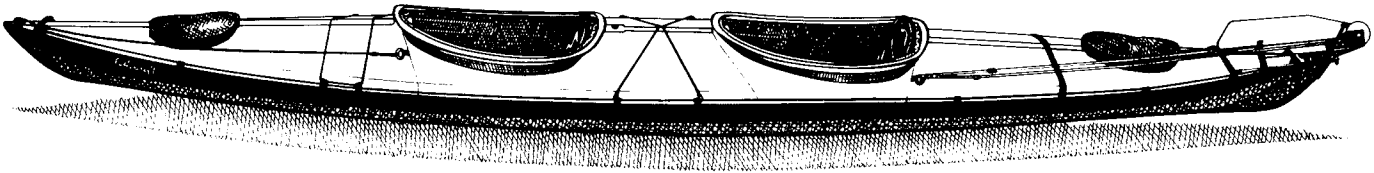

The K2 Expedition Double Folding Kayak

Feathercraft Folding Kayaks are the culmination of many years of design development and testing. The Feathercraft K2 is a stable, high volume, ocean touring kayak that performs exceptionally well in rough conditions.

Specifications

Length:	6 m (20′)
Beam:	85 cm (33″)
Pack size:	112 cm x 58 cm x 36 cm (44 x 23 x 14″)
Weight:	39 kg (87 lbs)
Frame:	
Main Members:	5/8″ O.D. square & 3/4″ round 6061-T6 aluminum alloy
Crossribs:	High density polyethylene
Rivets and Spacers:	Aluminum and Nylon
Screws and Bolts:	Stainless Steel
Protective Coating:	Clear Anodized
Deck:	Polytech
Hull:	Duratek
Seats:	1/2″ closed cell foam back & bottom, contoured plastic seat bottom, 3/16″ plastic seat back with inflatable lumbar support, inside a 420 denier nylon seat cover.
Sponsons:	Welded Urethane, with hose and valve
Standard Accessories:	Deck-lines and rigging Large fin flip-up surf rudder Adjustable foot rests and seat slings 2 nylon spray skirts 2 sea socks Large duffel-style pack-bag, with shoulder straps & hip-belt Packcloth over-the-shoulder carrying bag Repair kit Assembly video

K2 Frame

Tubing is Shockcorded

Pieces are Colour-coded

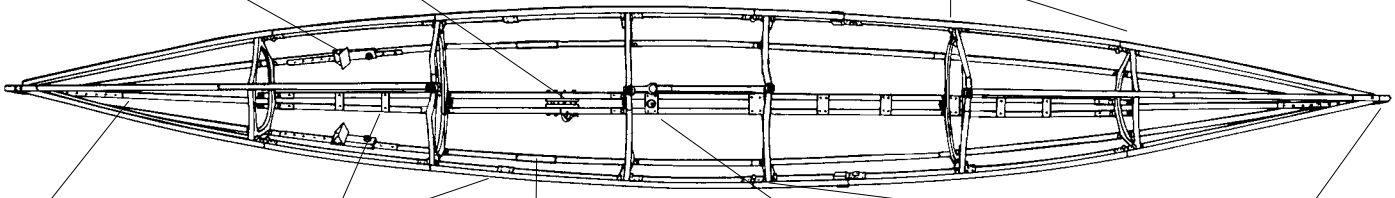

*High Density Polyethylene

Care and Maintenance

The Frame

The tubular frame is very strong and corrosion resistant. We recommend that the frame be disassembled after extensive use (2 – 3 months). The inside and outside of the tubes should be washed with fresh water. Try to keep the inserts and extension bars free of sand and grit.

Included in your repair kit is a small dropper tube of Bo-Shield T-9. This product is made by Boeing and is an excellent lubricant and protectant for aluminum.

Aerosal containers of Bo-Shield can be found at marine hardware stores. We also have available 4 oz bottles of Bo-Shield. However, please note, that the lid closure is not suitable for shipping after the bottle has been opened. This container would be good for your "at home" clean-up. We also have available Super Lube. This is a teflon lubricant in gel form. This product is also available from bike shops.

Apply the Bo-Shield lubricant to frame tube inserts, spring buttons and sliding pieces prior to assembly. If you should leave your boat assembled for a maximum of two months, this will assist in preventing tubes seizing.

Other maintenance "musts":

- every two months completely disassemble the kayak.
- wash the frame completely with fresh water.
- reapply lubricant and/or wipe down tubes with Bo-Shield T-9.
- after paddling, sponge out the inside of the kayak. Do not allow water to pool along keel bar.

The Skin

The surfaces of the skin will not rot. They are stable in sunlight and are very tear-resistant. Areas likely to be exposed to abrasion have been reinforced. However, we recommend care when approaching shore. Sharp rocks and barnacles can penetrate the skin. Never haul the boat over rocks.

The Polytech deck and Duratek hull are urethane. Seams are permanently sealed.

A patch kit is provided for deck, hull or sponson punctures. One urethane glue will work for repairs to all of these fabrics. For quick field repairs, duct tape works very well and is a good addition to your repair kit.

Tie-Downs

Webbing straps across the stern will secure a spare paddle. Shockcord in front of the cockpit is handy for holding a chart. Loops which secure the perimeter line can be used for lashing additional gear to the deck.

Sponsons

Due to the tight fit of the skin, the sponsons are under considerable pressure and some seepage of air may occur. It is advisable to periodically reinflate the sponsons. After paddling on hot days, release air from sponsons.

To Repair/Replace Sponson

The sponsons can be completely removed from the sleeve sewn to the inside of the skin. Turn the skin inside out. The sponson chamber is open at bow and stern ends. Tie a long string through the hole in the tab at the end of sponson. Pull sponson through the center opening of the chamber (where sponson hose is attached). To reinstall, pull the cord attached to the new sponson back through the chamber. Ensure sponson is not twisted in the chamber. Repeat with the opposite side. Urethane glue and patches are included in the repair kit. Duct tape works well on the sponsons.

Disassembly

Let the air out of the sponsons. Remove cockpit rim inserts, rebars and hatch rims. Remove seats and seat slings. Follow the rest of the assembly instructions in reverse.

Packing the kayak in the bag

In the large duffel-bag, place the padded seats on the bottom. Lay crosspieces on top of the seats. The aluminum frame sections go in next. Tuck remaining small items (ie: hatch rims, rudder) into available space. The skin goes into the black packcloth bag.

Carrying a loaded Kayak

Handles at ends of kayak are for carrying. A webbing loop passed under the hull at the bow and stern ends and around the shoulders will make lifting easier. **Do not lift a loaded kayak. Do not pull or drag the boat using D-rings on deck.**

Storage

Once dry, the kayak can be stored assembled or disassembled in a shaded, dry place.

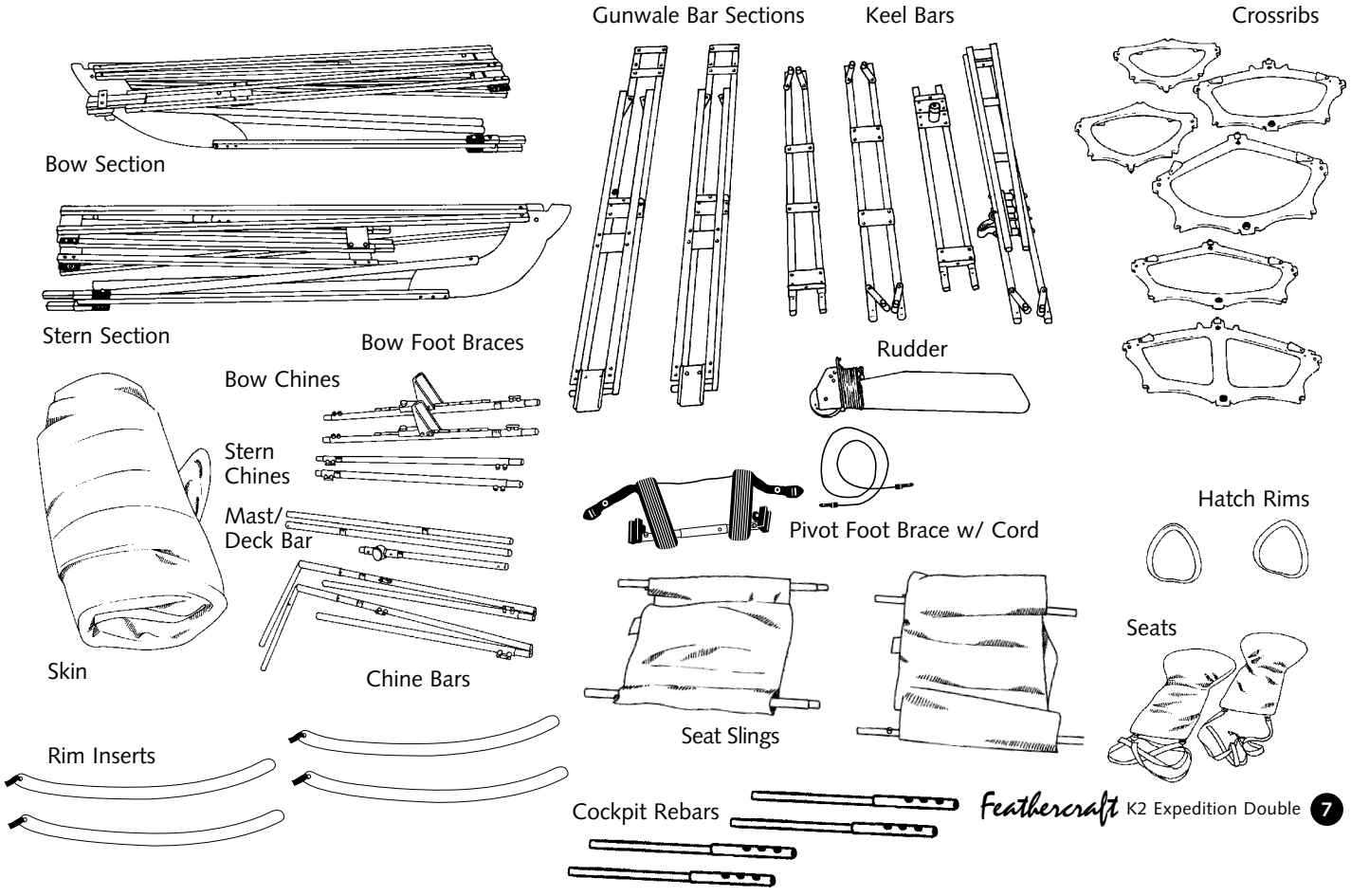
Gunwale Bar Sections
Keel Bars
Crossribs
Bow Section
Stern Section
Bow Foot Braces
Bow Chines
Rudder
Stern Chines
Mast/ Deck Bar
Pivot Foot Brace w/ Cord
Hatch Rims
Skin
Chine Bars
Seats
Seat Slings
Rim Inserts
Cockpit Rebars

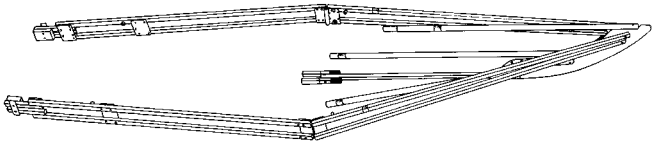

1 LAY OUT ALL FRAME PARTS AS SHOWN ON THE PREVIOUS PAGE.

2 FOLD OUT THE BOW END FRAME SECTION. #1 IS STAMPED ON KEEL.

3 SLIDE #1 KEEL SECTION OVER BOW FRAME INSERT. LIFT PLASTIC CONNECTORS TO LOCK INTO PLACE.

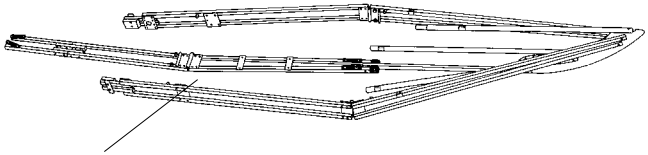

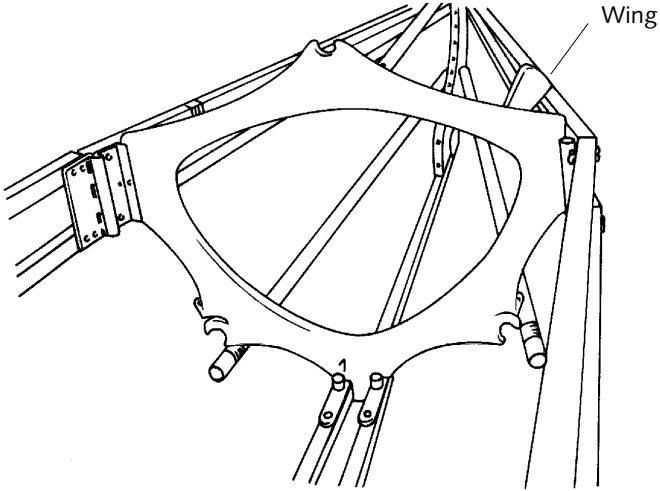

4 ATTACH #1 CROSSRIB TO KEEL.

- Hold crosspiece at 45 angle with "pin" at the bottom facing the bow.
- Insert pin into the end of the single keel tube on the bow end frame section.
- Bring crosspiece to vertical position. Attach gunwales to side of crosspiece.
- With the plastic "wing" in the "up" position, slide pin on crosspiece into hole on frame. Lock into position by turning "wing" down.

Block in open position

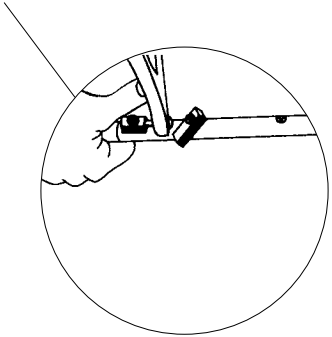

Dogpoint screw faces cockpit

Block in closed position

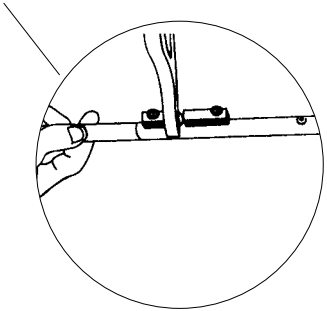

5 ATTACH BOW CHINES (YELLOW TAPE).

- The bow chines have the yellow tape and foot brace track attached.
- With the "twister" in the open position, line up the dogpoint screw with the hole on the delrin block.
- Close the twister and lock into place.

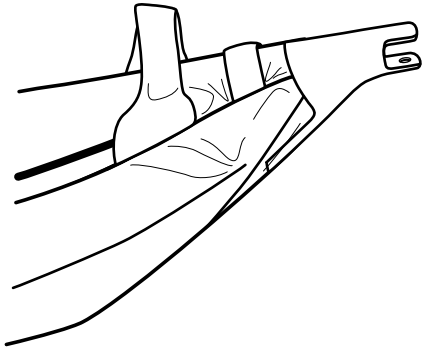

6 REPEAT STEPS #2 TO #5 TO ASSEMBLE THE STERN SECTION OF THE FRAME.

7 UNROLL THE KAYAK SKIN.

Note: The rudder bracket is permanently attached to the stern end of the kayak.

8 SLIDE BOW FRAME SECTION INTO THE BOW SECTION OF THE SKIN

- (The end with the Feathercraft logo is the bow.)
- Velcro tabs are attached to the center of the inside of the hull. Open the tabs.
- Insert the frame section as far as it will go, snug to the end. Use a “slide, lift” motion. Reaching through hatches is also helpful to pull the frame into place.
- Repeat with the stern frame section.
- Wrap velcro closures around keel bars.

9 INSTALL RIM INSERTS

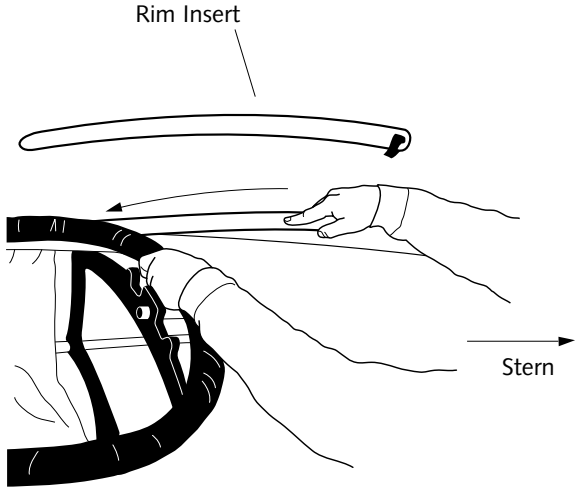

Slide into pocket on underside of coaming rim.

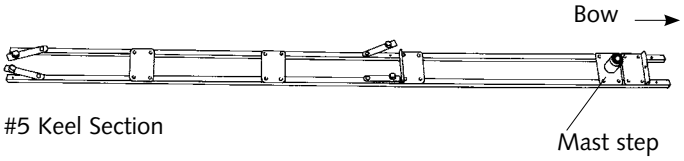

10 ATTACH KEEL BAR SECTION.

- One keel section has the #5 stamped on it; the shorter piece has no numbers stamped, but has a single aluminum plate at one end and two plates at the other. Attach these two sections together. The end with the two plates faces the bow. Attach the #5 keel section to the #5 frame section.

11 ATTACH BOW AND STERN KEEL.

- Reach through the bow cockpit and lift keel up enough to allow joining of the keel parts.
- Close black plastic tabs to lock into place.

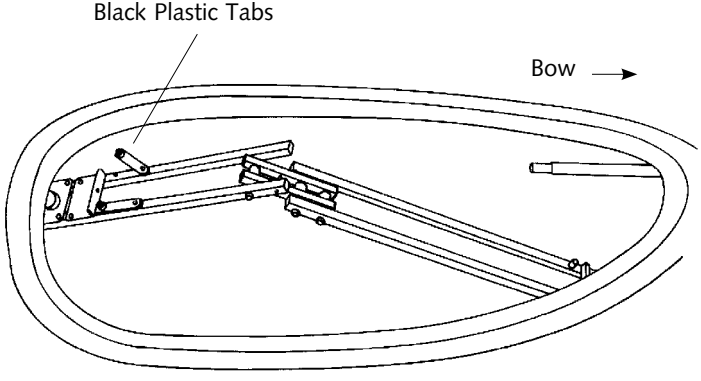

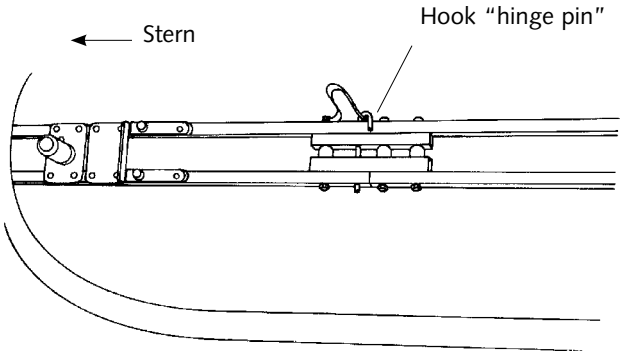

12 TENSIONING FRAME INTO THE SKIN.

- Push down on keel section, forcing frame tight into the skin.
- Insert the hook "hinge" pin through the hole in the middle of the hinge section to secure into place.

13 ATTACH GUNWALES (BLUE TAPE) TO THE STERN SECTION.

- The gunwale section is attached with the blue tape on the top bar and the plastic connectors towards the stern.

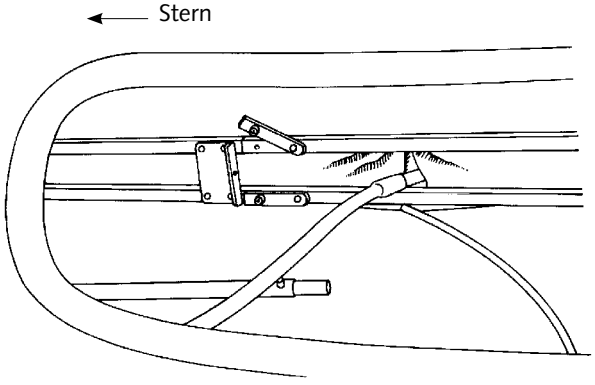

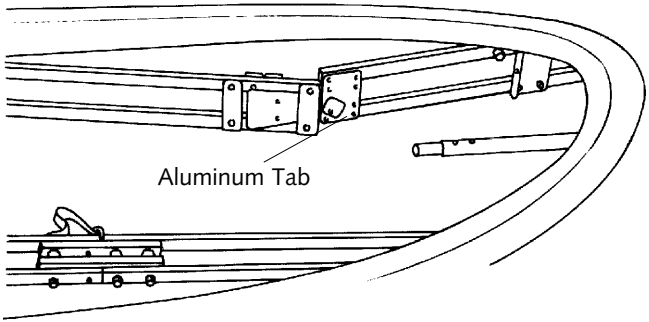

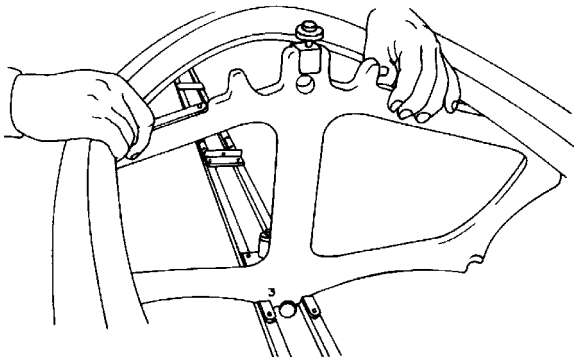

14 LOCKING GUNWALE BARS INTO POSITION.

a) Reach through bow cockpit and interlock ends of gunwale. Push out towards skin.

b) Twist aluminum tab on gunwale section to lock into place. Do this on both sides.

15 INSERT #3 CROSSRIB FIRST.

- Lay crossrib horizontally between the gunwale frame-work.
- Push frame out and twist crossrib down into position.
- Repeat with crossribs #2 and #5.
- With crossrib #4, attach bottom thumbscrew then pull gunwale bars in to meet the crossrib and insert side pins to the frame.

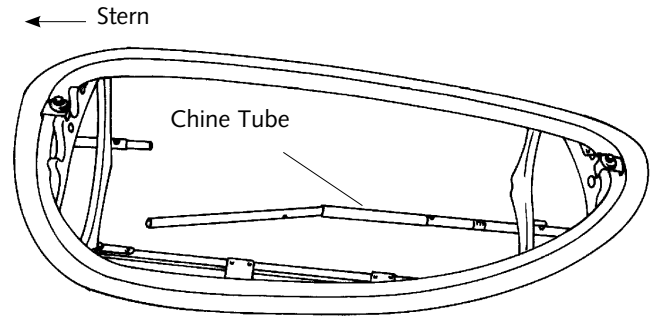

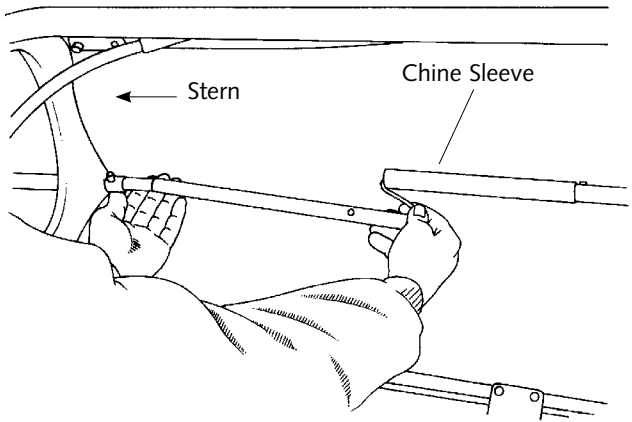

16 INSERT CHINE BARS.

(shock-corked tube sections with yellow tape)

a) Open up chine bars with short section towards stern.

- Remember, it is easier to work on the frame work from the opposite side.
- Tubes will slide easier when they are in-line with each other.
- Slide chines into kayak under crossribs. Join with chine tube at the bow section by pulling the bars into alignment and sliding together. (If necessary, pull tube towards center of skin to allow tubes to slide easily together.)

b) Attach stern section by pulling tube apart, extending shockcord and sliding tubes together. If necessary, pull tube towards center of skin to align and slide. To slide chine sleeve over shockcorded tube join, push the chine section "out" towards the outside of the skin. When the two chine tube sections are in line, pull back towards center of skin, slide sleeve to secure join.

16 INSERT CHINE BARS.

(Continued from previous page)

c) Have the delrin latch (or "twister") in the open position. Insert the pin on the #3 cross rib into the delrin block. Close the "twister".

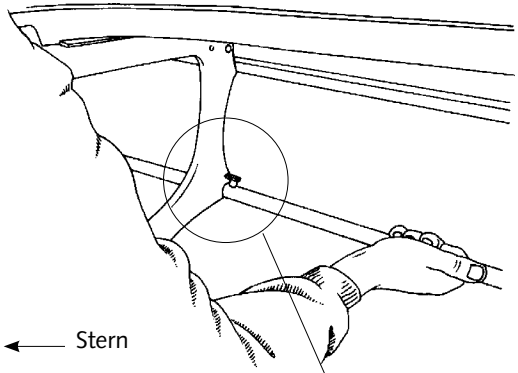

Block in open position

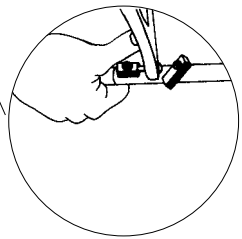

Block in closed position

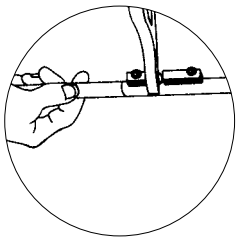

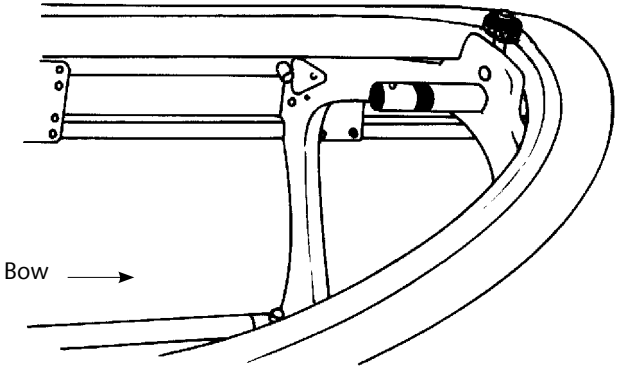

17 INSTALL BOW AND STERN DECK BARS (GREEN TAPE).

Bow deck bar has single green tape. Stern deck bar has double green tape.

a) Slide bow deck bar through the hole in the #2 crossrib, and stern deck bar through hole in #5 crossrib. (Black plug faces towards cockpit.)

b) Reach through hatch opening and connect with forward deck bar with spring button.

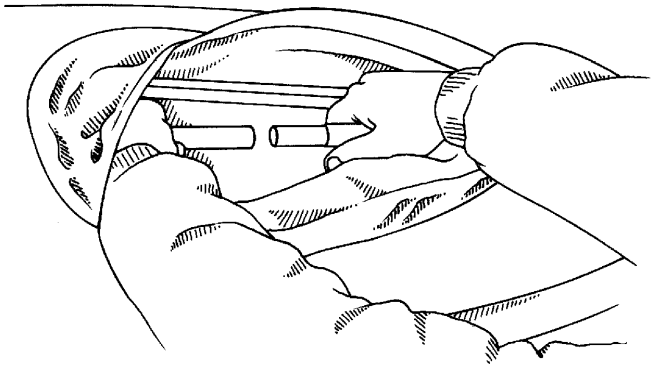

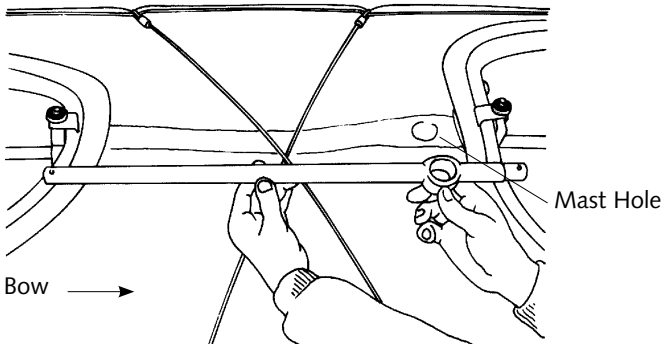

18 INSTALL MAST DECK BAR.

- Reach under deck between cockpits to slide mast deck bar through holes in crosspiece. Locate mast hole towards bow and holes in the ends of the tube facing up.

19 ATTACH COAMING BRACKET.

- Screw down coaming knob on bracket on crosspiece so that bolt extends through hole in deckbar.

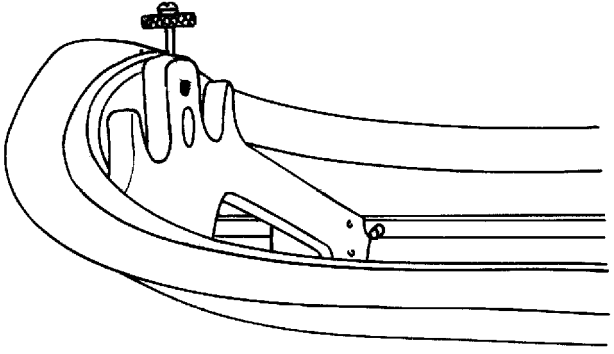

20 INSTALL COCKPIT REBARS IN BOW AND STERN COCKPITS

Slide oversleeve on rebar towards bow. Insert stern end of tube (a) through hole in crossrib at stern of cockpit. Insert bow end (b) through hole in crossrib at bow of cockpit. Slide oversleeve towards stern till spring button appears in 2nd hole.

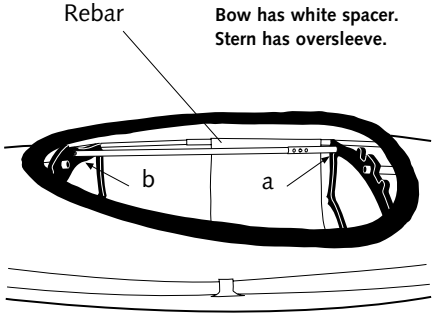

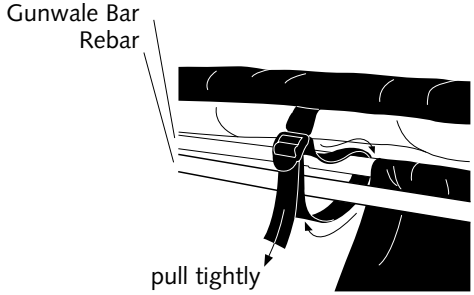

Rebar is secured with web strap.

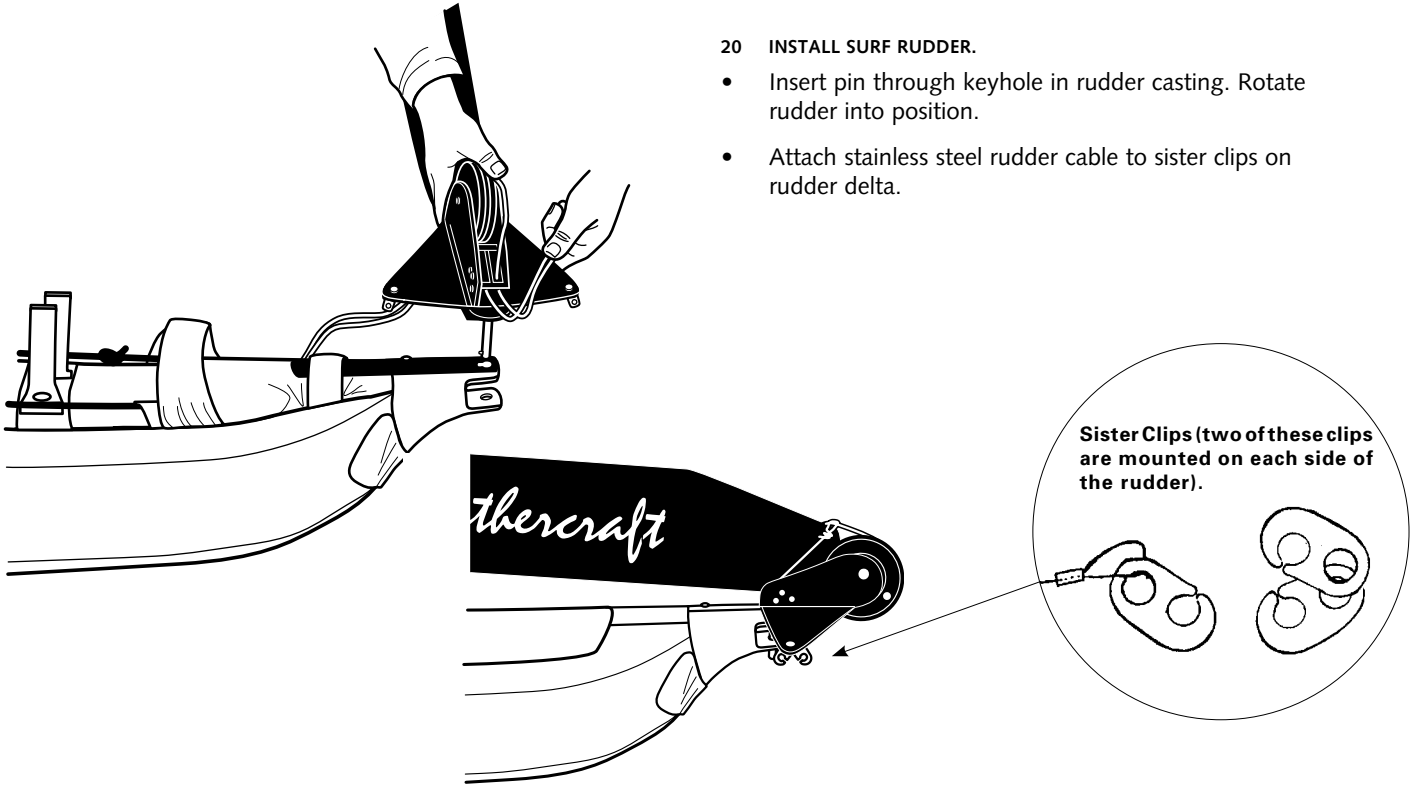

20 INSTALL SURF RUDDER.

- Insert pin through keyhole in rudder casting. Rotate rudder into position.
- Attach stainless steel rudder cable to sister clips on rudder delta.

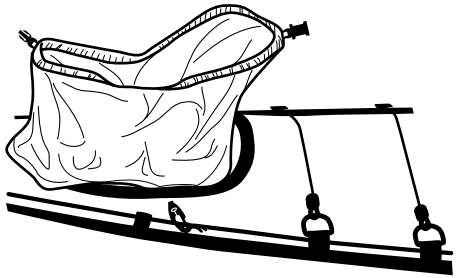

21 INSTALL HATCH RIMS.

- Place plastic rim over hatch opening. Wrap fabric sleeve with bungee over rim.
- Roll down hatch neck. Close with buckle.
- Cover with hatch cover. Secure with toggle.

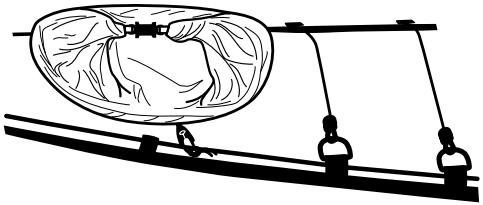

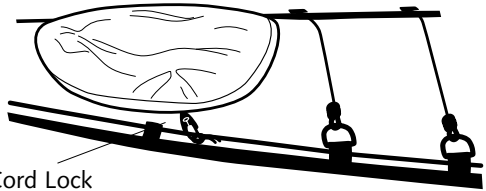

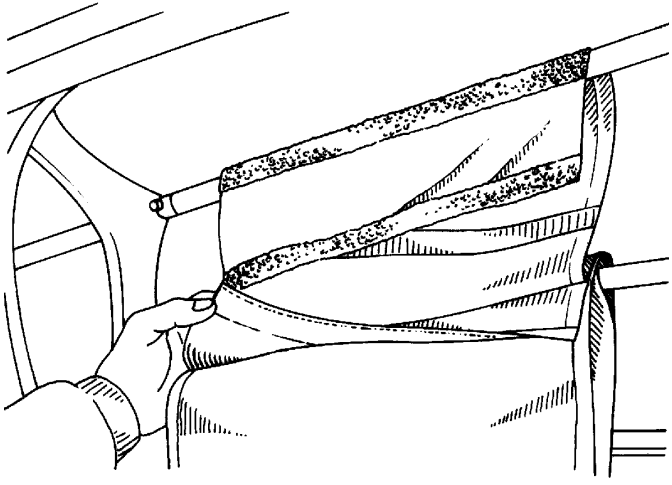

22 INSTALL SEAT-SLINGS.

- The slings are marked Bow and Stern on the underside of the white tag sewn to the sling. The white label should be positioned towards the stern.
- Bow seat bars have single band of white tape. Stern seat bars have double white tape.
- Secure Velcro sandwich below sling portion, around chine bars.
- Slide seat bars outside crossribs and between gunwale bars. Push seat bars with white spacer pin out and back past crossrib, then snap forward into place.

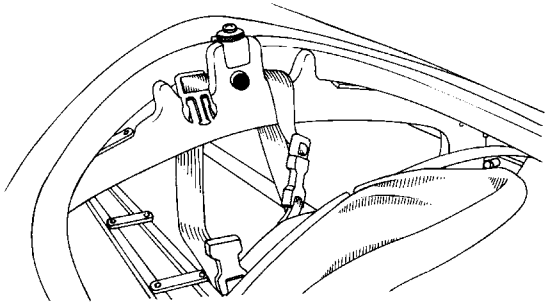

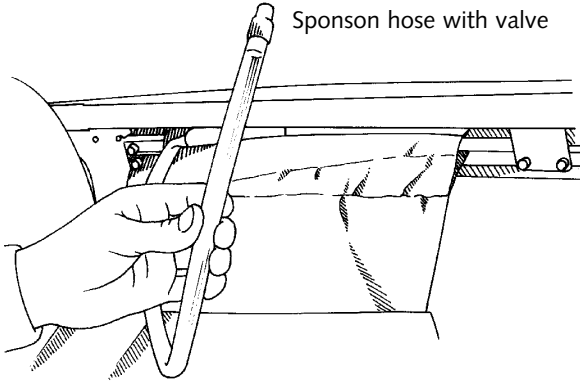

23 INSTALL SEATS.

- One seat is installed in front of the #3 crossrib, and one in front of the #5 crossrib.
- Loop the webbing attached to the seat back around the top of the crossrib. Attach buckle and make any adjustments. Slider buckles attached to webbing at the side of the seat gives the paddler additional fitting adjustments.
- The long pieces of webbing attached to the front of the seat bottom are looped around the base of the #3 crossrib in front of the seat and secured with buckle.

24 INFLATE SPONSONS.

- Turn the top of the valve to open. When inflating sponsons, alternate sides to ensure the frame and skin remain centered. The air pressure from the sponsons can shift the frame within the skin. Keep blowing until the skin is nice and tight. Twist top cap to close. Tuck sponson tubes and valves out of the cockpit area. Avoid stepping on the hose and valve, and try to keep the valve free of sand.

The Feathercraft Sea Sock

Made from high-quality coated nylon, the sea sock is a great safety item. The top of the sock fits tightly around the cockpit coaming rim. Contoured to fit along the seatback and bottom, the "foot" is loose through the cockpit, creating a "pod". The paddler then sits in the sock. Legs and feet are not constricted. The spray skirt fits as usual. In the event of a capsize, water will only enter the sock, and not the whole boat. It's also great for keeping the inside of your kayak clean.

Tips on Usage and Installation

- The shiny side of the fabric faces in towards the kayak frame.
- When facing the bow of the kayak, the Feathercraft label should be on the right side.
- The center seam on the up-side of the Sea Sock should be centered on the bow point of the coaming.
- Once the Sea Sock is in place, sit in the sock, and "burp" it by lifting the edges, releasing trapped air that causes the sock to billow up.

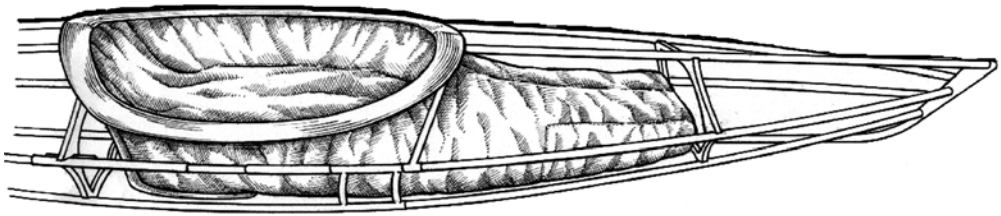

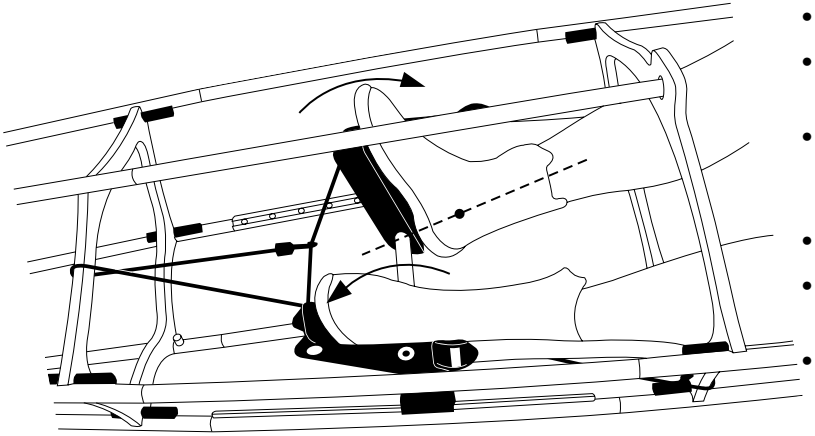

(pedals in K1 shown)

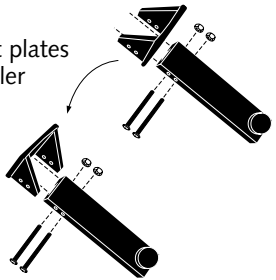

CONNECTING RUDDER CONTROL TO FOOT BRACE FOR STERN PADDLE

- Slide pivot assembly onto stern foot track.
- Red webbing straps from rudder cable attaches to buckle on foot pedal.
- Shock cord with clips: clip one end to the cord between the pedals; loop the cord around the top of the #3 crossrib, and clip.
- The ergonomics of the pedals allow for a natural pivot action.
- The ball of the foot rests on the top of the pedal. Leg and ankle bone are in line, supported by the cross-brace.
- Three positions are possible for each foot plate. To widen or narrow the foot plate position, release the spring button under the plate.
- To shorten cable length, pull on tab of webbing with loop. To lengthen, lift tab of ladder-lock buckle.

We strongly recommend the use of Sea Socks at all times as a safety item and as a means of keeping the inside of the kayak free of sand and dirt.

- The bow paddler braces against foot rests fastened in position by the thumb screw knob. The foot plates can be reversed if more or less leg extension is required.

© Feathercraft Products Limited 1998
Printed in Canada 05.2010
Recycled paper